DECOWELL®

| | |
|---|---|
| Company | Nanjing Decowell Automation |
| Project Description | RB Series |
| Project No. | RB-V2.0 |
| Project Name | RB Series Wiring Diagrams |
| Address | Pukou District, Nanjing |
| Project Manager | Technical Service Dept. |
| Created Date | 2024/8/15 |
| Edited Date | 2024/11/14 |
| Pages | 19 |

Core Values: "Quality builds the brand, service shapes the future"

Vision: "To become the world's leading provider of industrial automation products and solutions"

Mission: To be an expert in industrial control signal processing centered on I/O modules

# Contents

Column X: an auto-generated page was manually modified


| Page | Page Description | Supplementary Page Field | Date | Editor | X |
|---|---|---|---|---|---|
| /1 | Cover | | 2024/8/15 | Lidao | X |
| /2 | Contents | | 2024/11/14 | Lidao | |
| /3 | RB Adapter Power Wiring Diagram | | 2024/11/14 | Lidao | |
| /4 | 8DI Module Wiring Diagram (2-/3-Wire Compatible) | | 2024/11/14 | Lidao | |
| /5 | 8DI Module Wiring Diagram | | 2024/11/14 | Lidao | |
| /6 | 16DI Module Wiring Diagram | | 2024/11/5 | Lidao | |
| /7 | 8DO Module Wiring Diagram | | 2024/11/5 | Lidao | |
| /8 | 16DO Module Wiring Diagram | | 2024/11/5 | Lidao | |
| /9 | Relay Module Wiring Diagram | | 2024/11/5 | Lidao | |
| /10 | 4AI Module Wiring Diagram | | 2024/11/5 | Lidao | |
| /11 | 8AI Module Wiring Diagram | | 2024/11/14 | Lidao | |
| /12 | 4AO Module Wiring Diagram | | 2024/11/14 | Lidao | |
| /13 | 8AO Module Wiring Diagram | | 2024/11/14 | Lidao | |
| /14 | RTD / Thermocouple Wiring Diagram | | 2024/11/14 | Lidao | |
| /15 | Communication Module | | 2024/11/14 | Lidao | |
| /16 | Pulse Output Module | | 2024/11/14 | Lidao | |
| /17 | 2-Ch Single-Ended Encoder Input Module | | 2024/11/14 | Lidao | |
| /18 | 2-Ch Differential Encoder Input Module | | 2024/11/14 | Lidao | |
| /19 | Power Module | | 2024/11/14 | Lidao | |

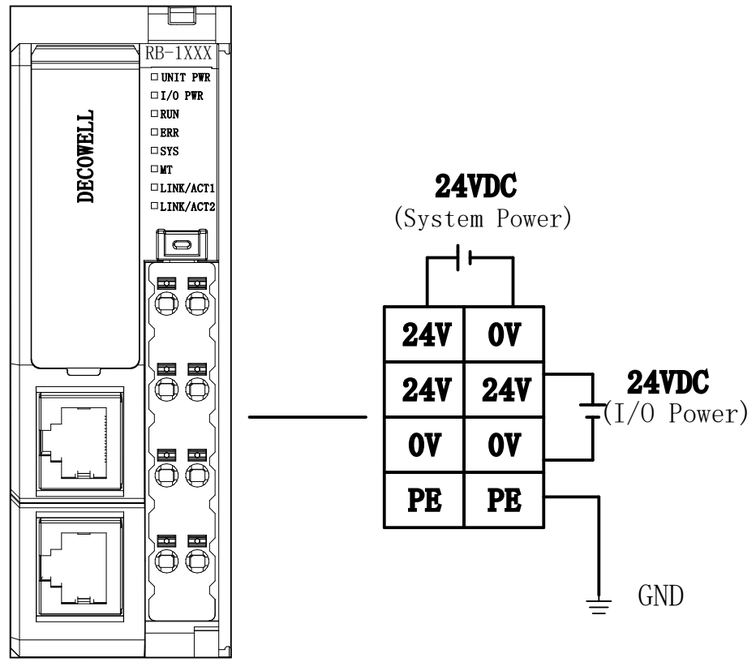


RB-1XXX ——— RB-1100
RB-1110
RB-1130
RB-1040
RB-1240
RB-1120
RB-1140

Note: The RB series adapter power consists of system power and I/O load power.

Two sets of DC 24V are required for normal operation.

| | | | | | | | | | |
|---|---|---|---|---|---|---|---|---|---|
| | | | Date | 2024/11/14 | DECOWELL | Nanjing Decowell Automation | RB Adapter Power Wiring Diagram | | = |
| | | | Checked | Lidao | | | | | + |
| | | | Approved | | RB Series | | | RB-V2.0 | Pages 3 |
| Revision | Date | Name | Original Project | | Supersedes | Superseded by | | | Page 3/19 |

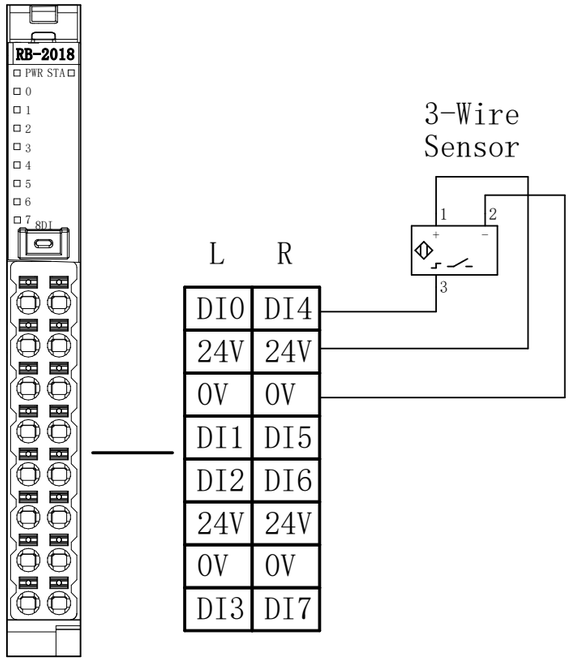


# RB-2018

8-Ch Digital Input Module (NPN)

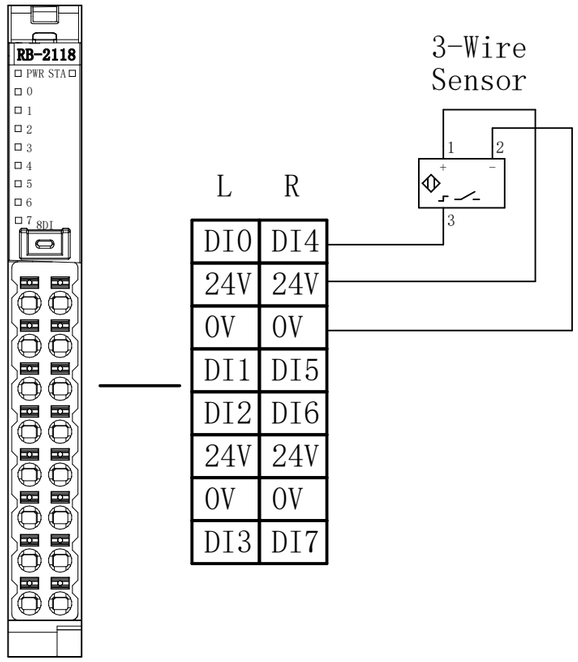


# RB-2118

8-Ch Digital Input Module (PNP)



| | | | | | | | | | |
|---|---|---|---|---|---|---|---|---|---|
| | | | Date | 2024/11/14 | DECOWELL | Nanjing Decowell Automation | 8DI Module Wiring Diagram (2-/3-Wire Compatible) | = | |
| | | | Checked | Lidao | | | | + | |
| | | | Approved | | RB Series | | | RB-V2.0 | Pages 4 |
| Revision | Date | Name | Original Project | | Supersedes | Superseded by | | | Page 4/19 |

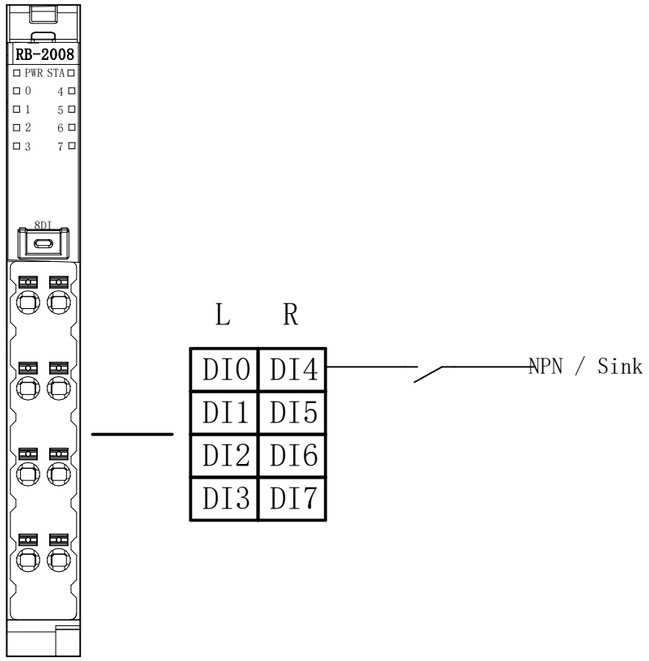


RB-2008

8-Ch Digital Input Module (NPN)

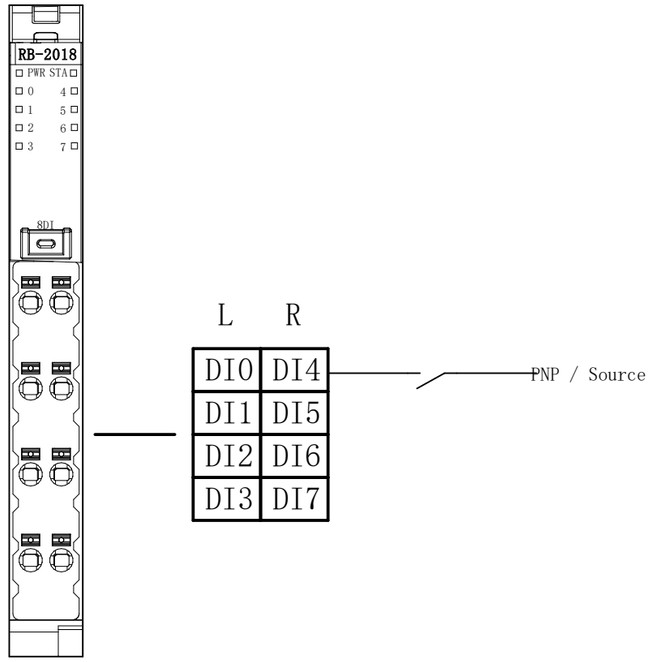


RB-2018

8-Ch Digital Input Module (PNP)



| | | | | | | | | | |
|---|---|---|---|---|---|---|---|---|---|
| | | | Date | 2024/11/14 | DECOWELL | Nanjing Decowell Automation | 8DI Module Wiring Diagram | | = |
| | | | Checked | Lidao | | | | | + |
| | | | Approved | | RB Series | | | RB-V2.0 | Pages 5 |
| Revision | Date | Name | Original Project | | Supersedes | Superseded by | | | Page 5/19 |

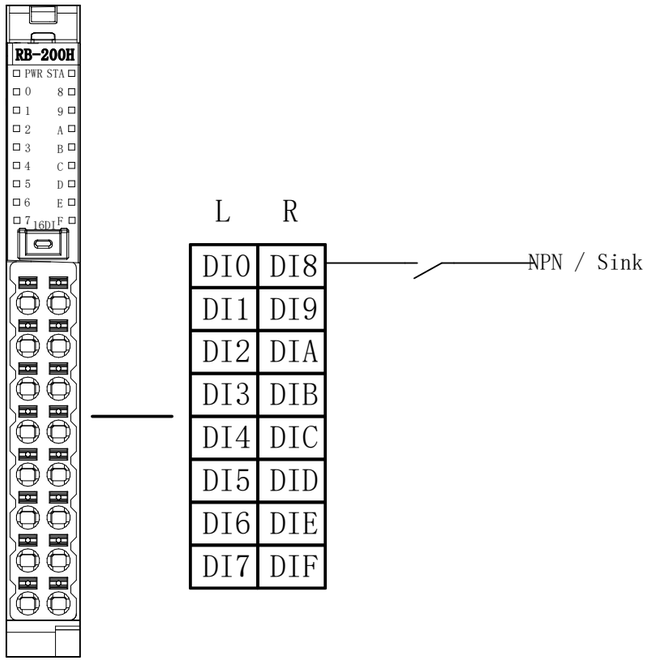


## RB-200H

16-Ch Digital Input Module (NPN, 1-Wire)

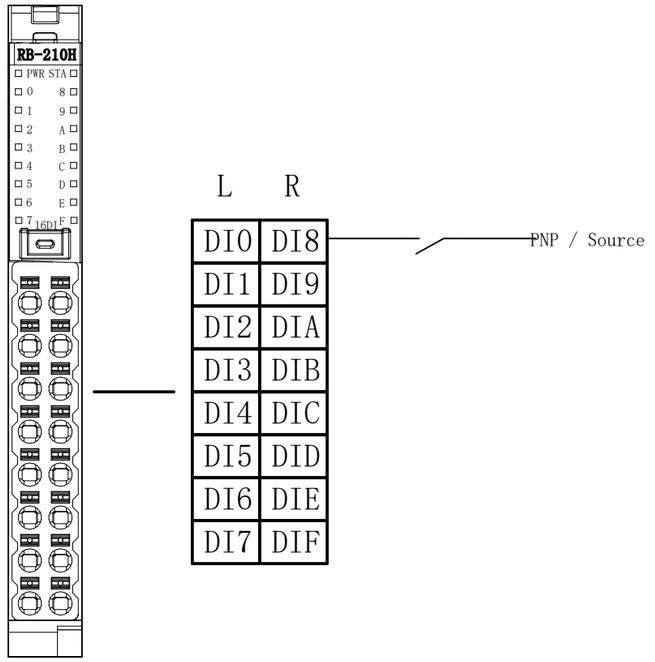


## RB-210H

16-Ch Digital Input Module (PNP, 1-Wire)



| | | | | | | | | | |
|---|---|---|---|---|---|---|---|---|---|
| | | | Date | 2024/11/5 | DECOWELL | Nanjing Decowell Automation | 16DI Module Wiring Diagram | = | |
| | | | Checked | Lidao | | | | + | |
| | | | Approved | | RB Series | | | RB-V2.0 | Pages 6 |
| Revision | Date | Name | Original Project | | Supersedes | Superseded by | | | Page 6/19 |

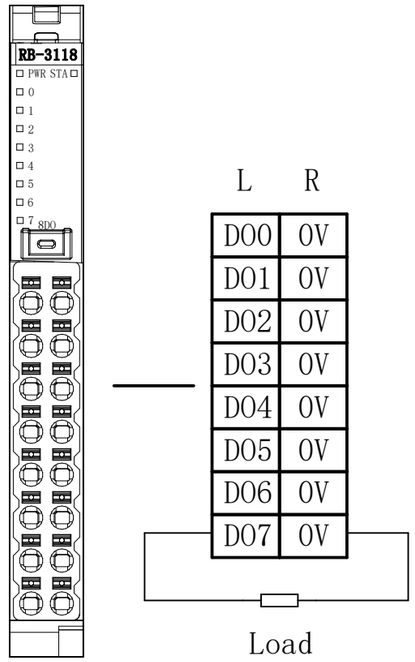


## RB-3118

8-Ch Digital Output Module (PNP)

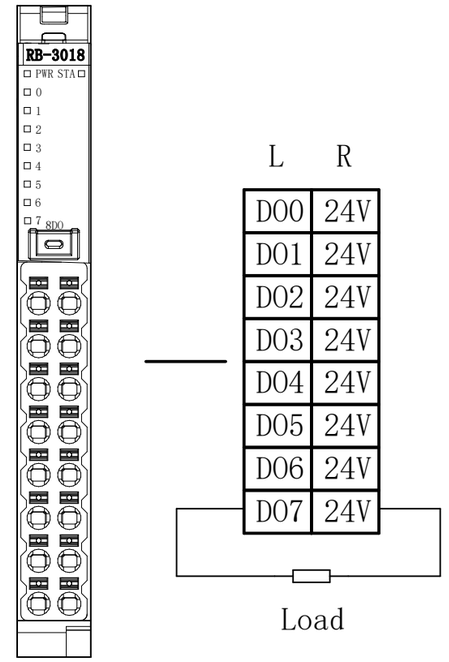


## RB-3018

8-Ch Digital Output Module (NPN)



| | | | | | | | | | |
|---|---|---|---|---|---|---|---|---|---|
| | | | Date | 2024/11/5 | DECOWELL | Nanjing Decowell Automation | 8DO Module Wiring Diagram | = | |
| | | | Checked | Lidao | | | | + | |
| | | | Approved | | RB Series | | | RB-V2.0 | Pages 7 |
| Revision | Date | Name | Original Project | | Supersedes | Superseded by | | | Page 7/19 |

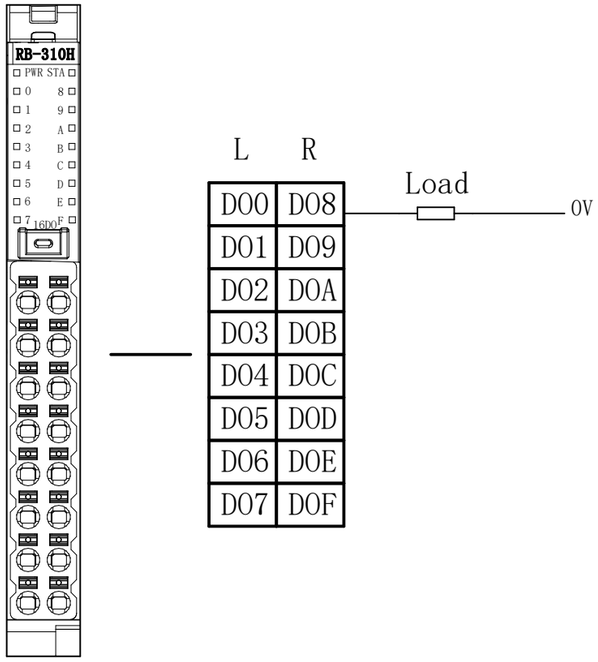


## RB-310H

16-Ch Digital Output Module (PNP, 1-Wire)

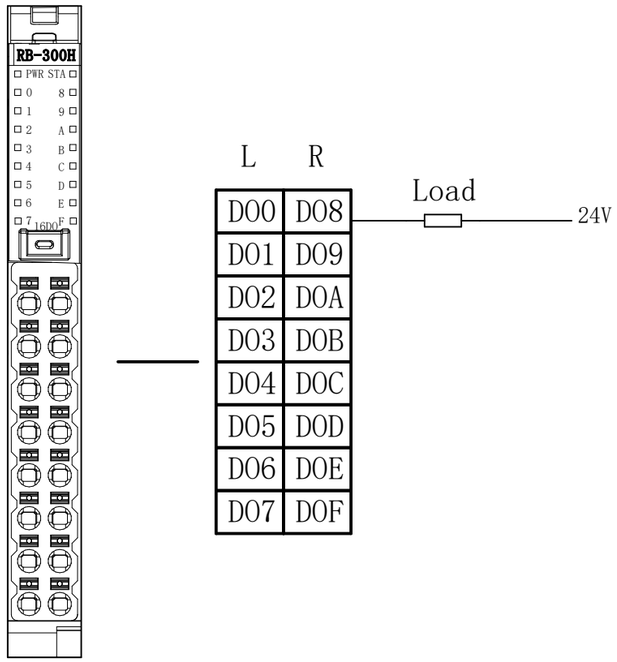


## RB-300H

16-Ch Digital Output Module (NPN, 1-Wire)



| | | | | | | | | | |
|---|---|---|---|---|---|---|---|---|---|
| | | | Date | 2024/11/5 | DECOWELL | Nanjing Decowell Automation | 16DO Module Wiring Diagram | = | |
| | | | Checked | Lidao | | | | + | |
| | | | Approved | | RB Series | | | RB-V2.0 | Pages 8 |
| Revision | Date | Name | Original Project | | Supersedes | Superseded by | | | Page 8/19 |

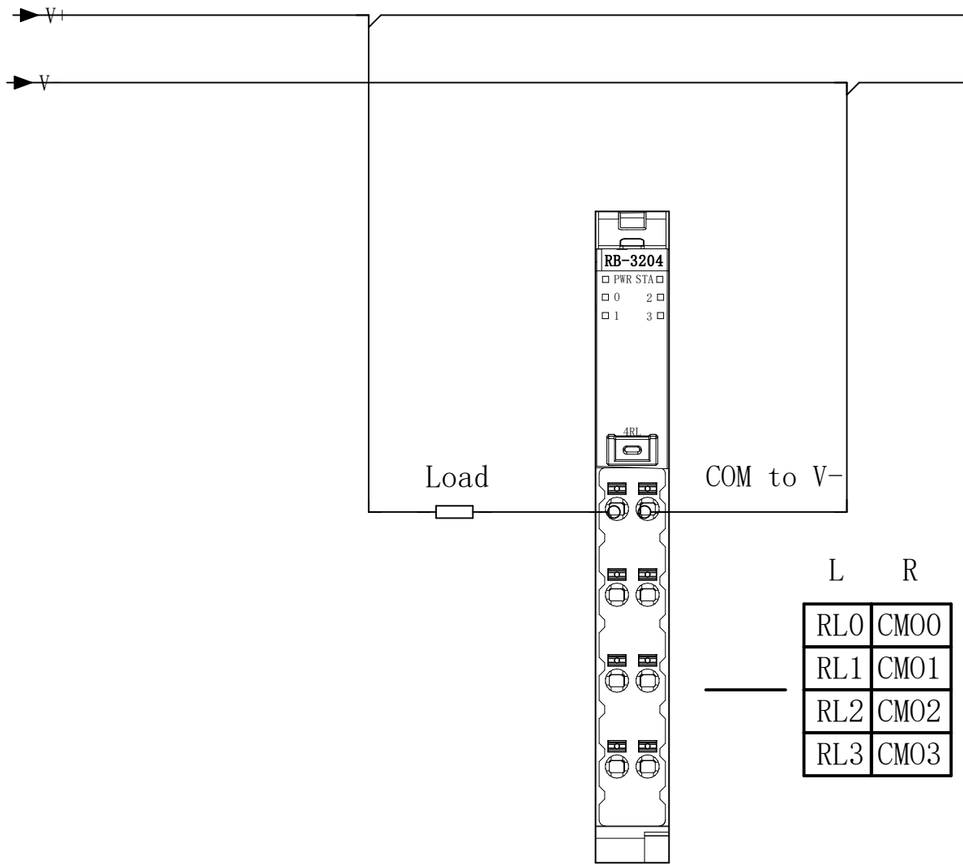


RB-3204

4-Ch Relay Output Module (2A)

Normally-open contact between output channel and COM

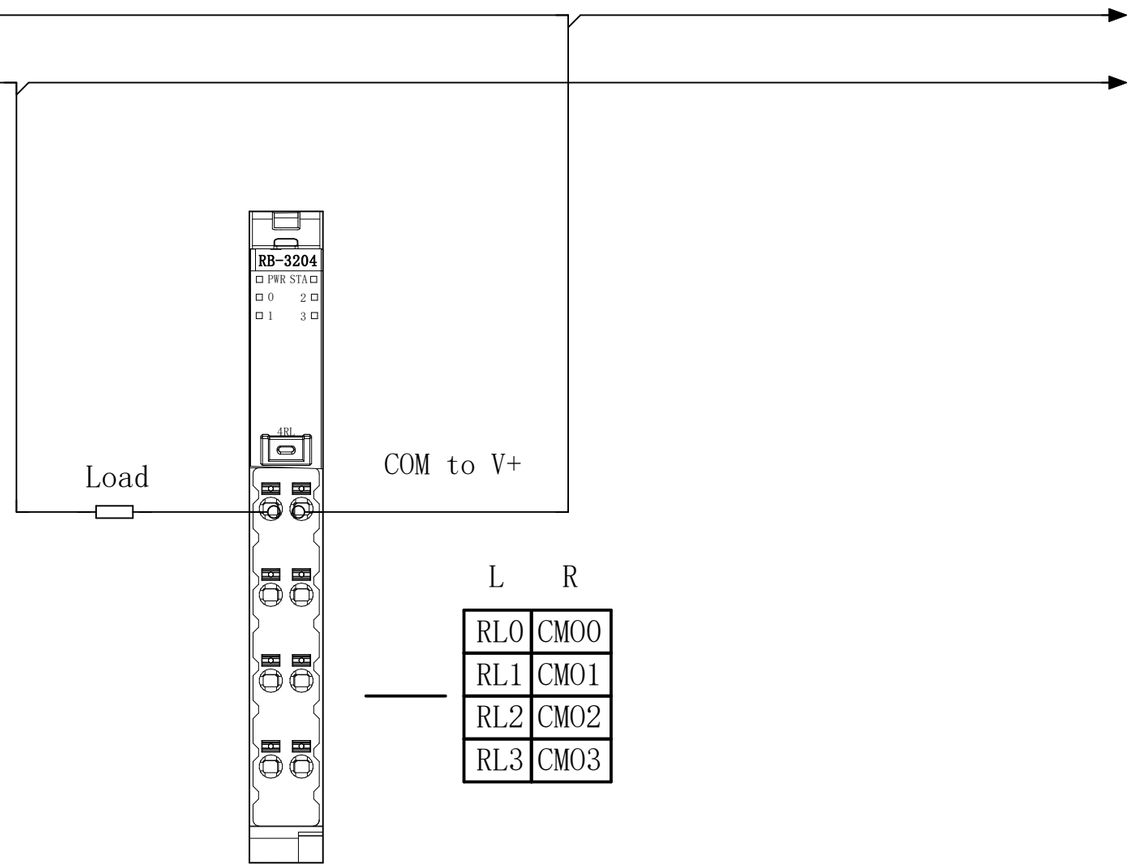


RB-3204

4-Ch Relay Output Module (2A)

Normally-open contact between output channel and COM

Note: The COM points of the relay module are not interconnected.



| | | | | | | | | | |
|---|---|---|---|---|---|---|---|---|---|
| | | | Date | 2024/11/5 | DECOWELL | Nanjing Decowell Automation | Relay Module Wiring Diagram | | = |
| | | | Checked | Lidao | | | | | + |
| | | | Approved | | RB Series | | | RB-V2.0 | Pages 9 |
| Revision | Date | Name | Original Project | | Supersedes | Superseded by | | | Page 9/19 |

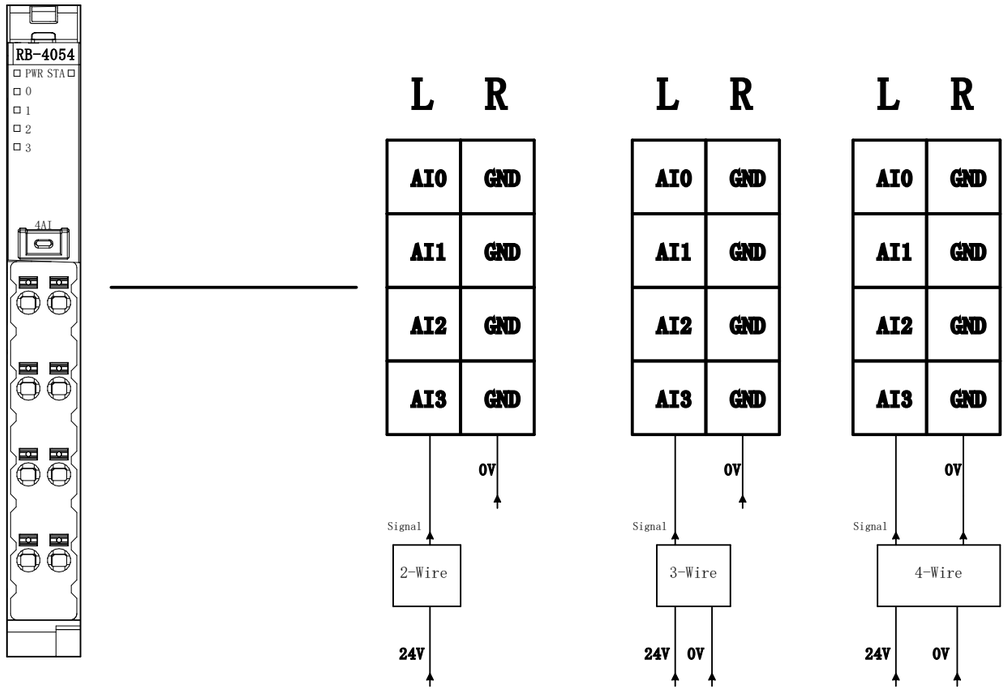


# RB-4054

4-Ch Analog Input Module (Voltage)

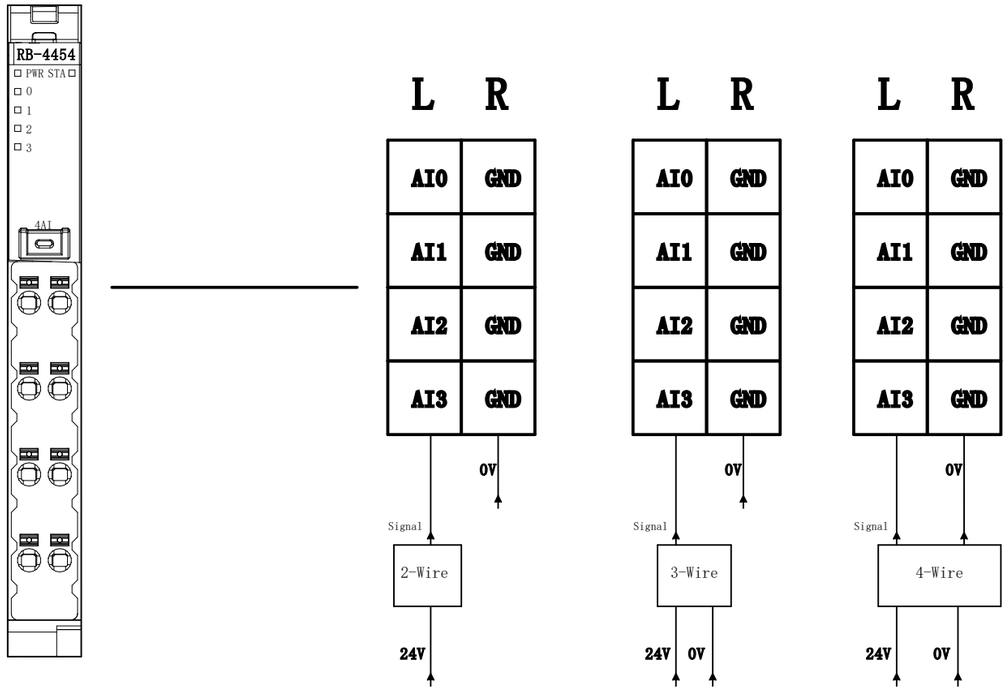


# RB-4454

4-Ch Analog Input Module (Current)



| | | | | | | | | | |
|---|---|---|---|---|---|---|---|---|---|
| | | | Date | 2024/11/5 | DECOWELL | Nanjing Decowell Automation | 4AI Module Wiring Diagram | | = |
| | | | Checked | Lidao | | | | | + |
| | | | Approved | | RB Series | | | RB-V2.0 | Pages 10 |
| Revision | Date | Name | Original Project | | Supersedes | Superseded by | | | Page 10/19 |

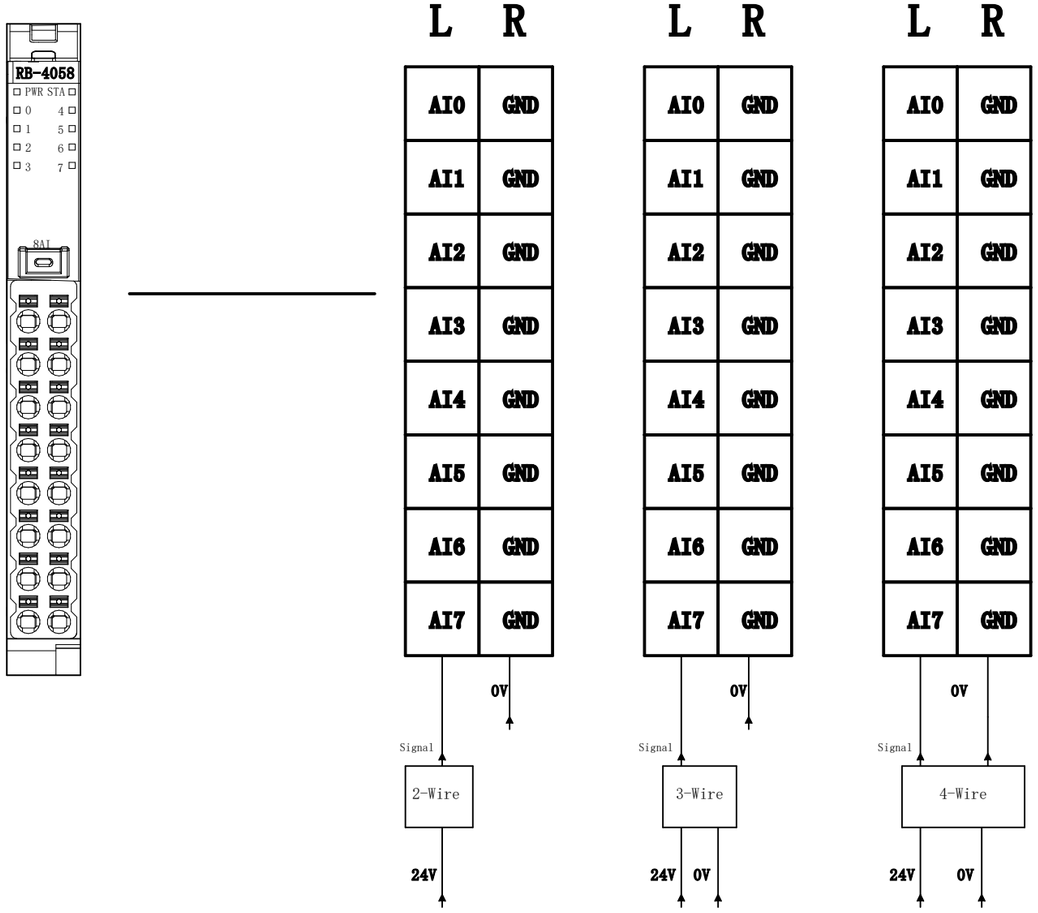


# RB-4058

8-Ch Analog Input Module (Voltage)

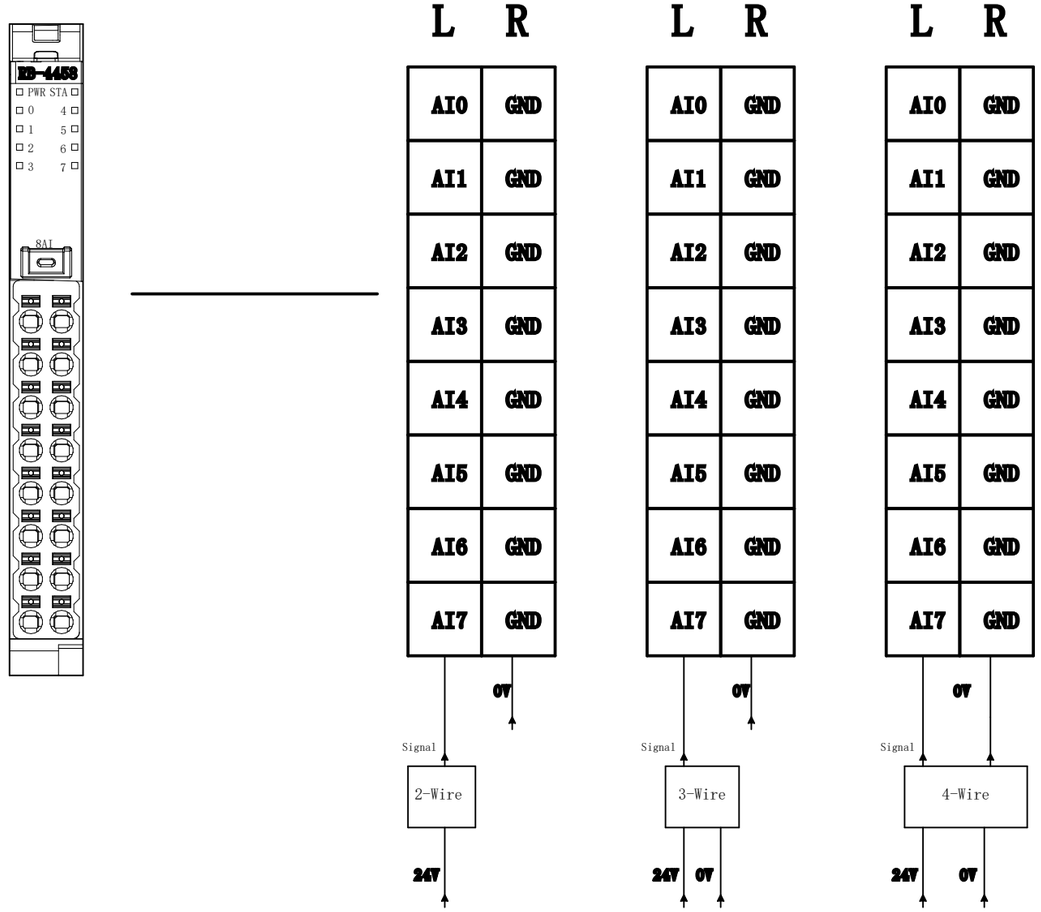


# RB-4458

8-Ch Analog Input Module (Current)



| | | | | | | | | | |
|---|---|---|---|---|---|---|---|---|---|
| | | | Date | 2024/11/14 | DECOWELL | Nanjing Decowell Automation | 8AI Module Wiring Diagram | = | |
| | | | Checked | Lidao | | | | + | |
| | | | Approved | | RB Series | | | RB-V2.0 | Pages 11 |
| Revision | Date | Name | Original Project | | Supersedes | Superseded by | | | Page 11/19 |

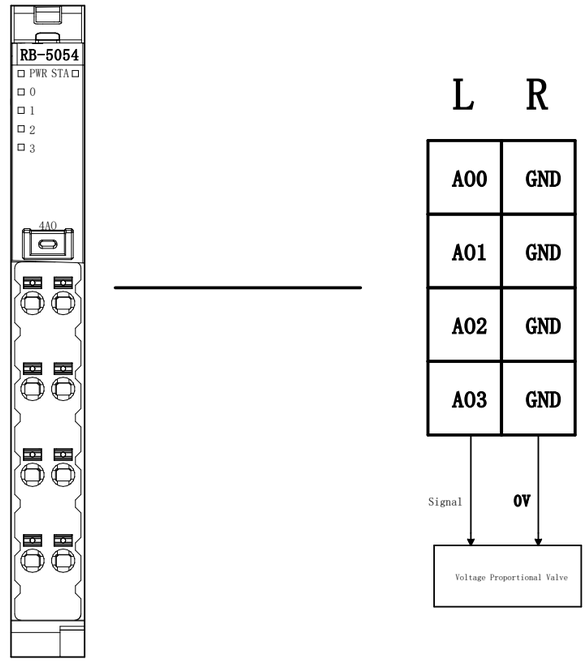


RB-5054

4-Ch Analog Output Module (Voltage)

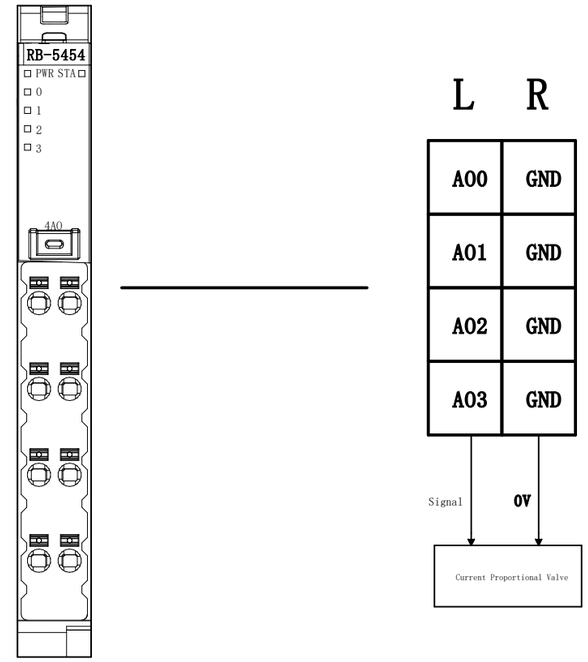


RB-5454

4-Ch Analog Output Module (Current)



| | | | | | | | | | |
|---|---|---|---|---|---|---|---|---|---|
| | | | Date | 2024/11/14 | DECOWELL | Nanjing Decowell Automation | 4AO Module Wiring Diagram | | = |
| | | | Checked | Lidao | | | | | + |
| | | | Approved | | RB Series | | | RB-V2.0 | Pages 12 |
| Revision | Date | Name | Original Project | | Supersedes | Superseded by | | | Page 12/19 |

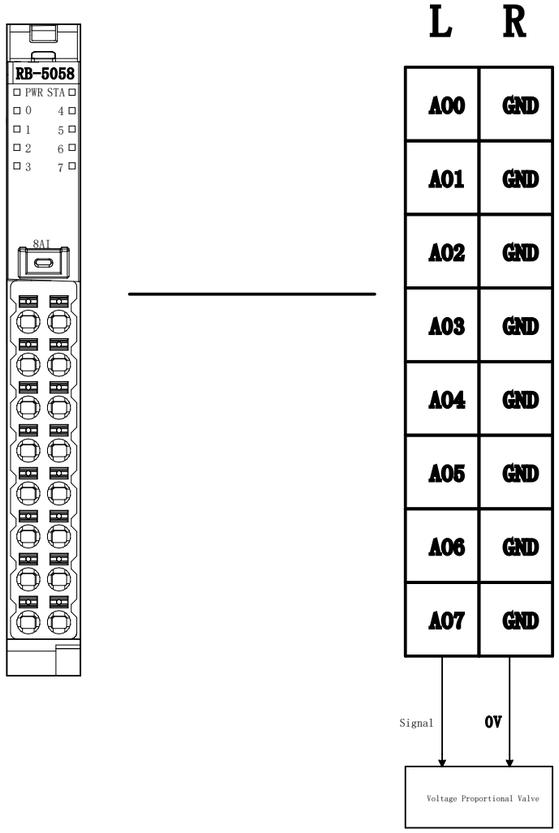


# RB-5058

8-Ch Analog Output Module (Voltage)

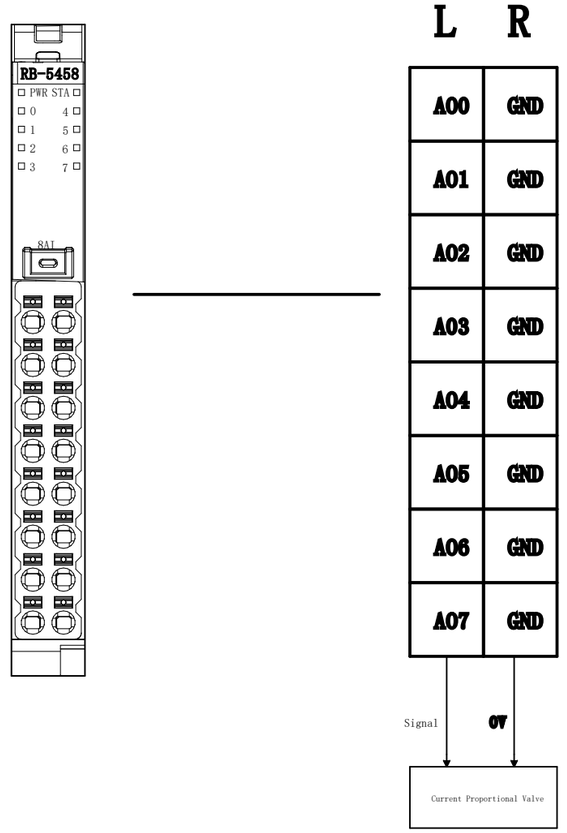


# RB-5458

8-Ch Analog Output Module (Current)



| | | | | | | | | | |
|---|---|---|---|---|---|---|---|---|---|
| | | | Date | 2024/11/14 | DECOWELL | Nanjing Decowell Automation | 8AO Module Wiring Diagram | = | |
| | | | Checked | Lidao | | | | + | |
| | | | Approved | | RB Series | | | RB-V2.0 | Pages 13 |
| Revision | Date | Name | Original Project | | Supersedes | Superseded by | | | Page 13/19 |

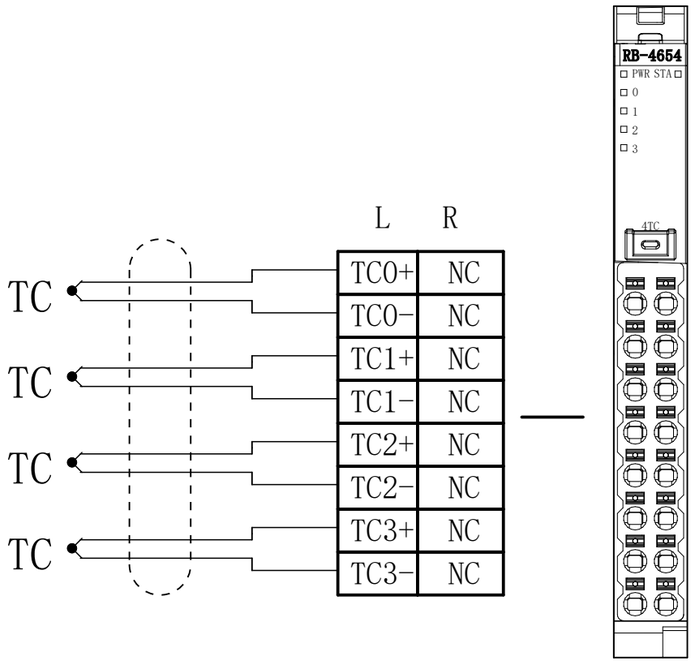


RB-4654

4-Ch Thermocouple (TC) Input Module

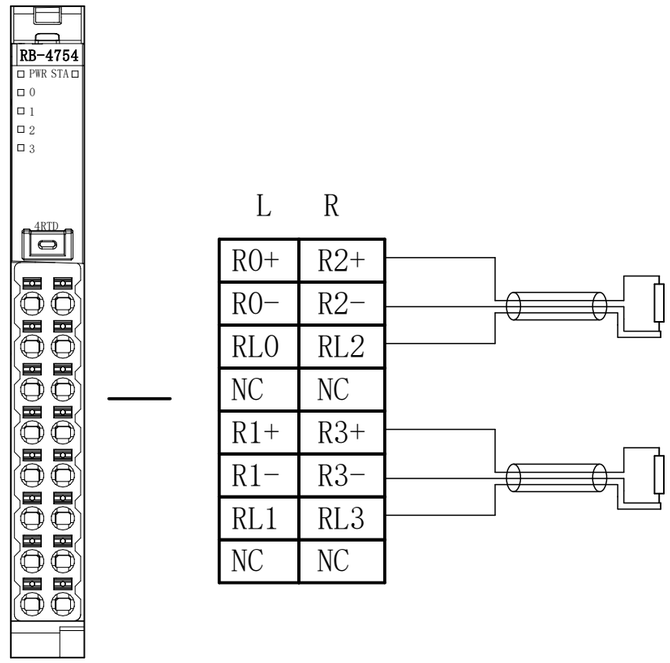


RB-4754

4-Ch RTD Input Module



| | | | | | | | | | |
|---|---|---|---|---|---|---|---|---|---|
| | | | Date | 2024/11/14 | DECOWELL | Nanjing Decowell Automation | RTD / Thermocouple Wiring Diagram | | = |
| | | | Checked | Lidao | | | | | + |
| | | | Approved | | RB Series | | | RB-V2.0 | Pages 14 |
| Revision | Date | Name | Original Project | | Supersedes | Superseded by | | | Page 14/19 |

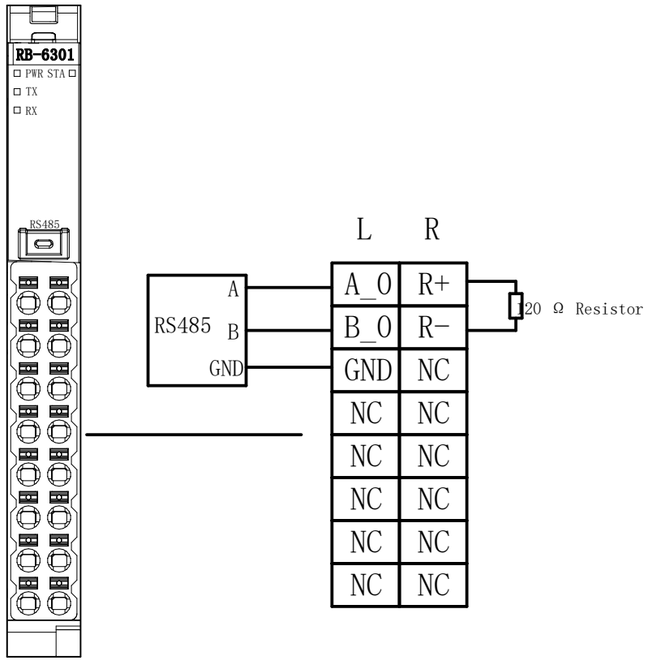


# RB-6301

Single-Channel RS485 Free-Port Communication Module

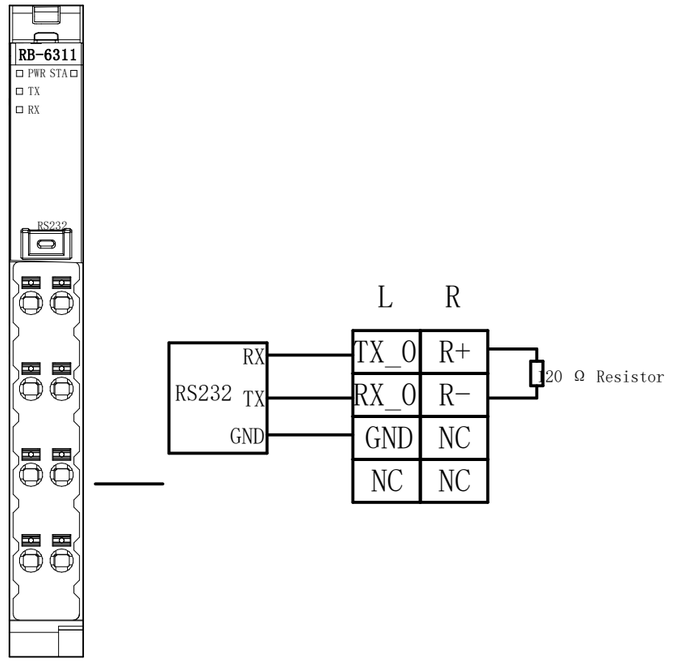


# RB-6311

Single-Channel RS232 Free-Port Communication Module

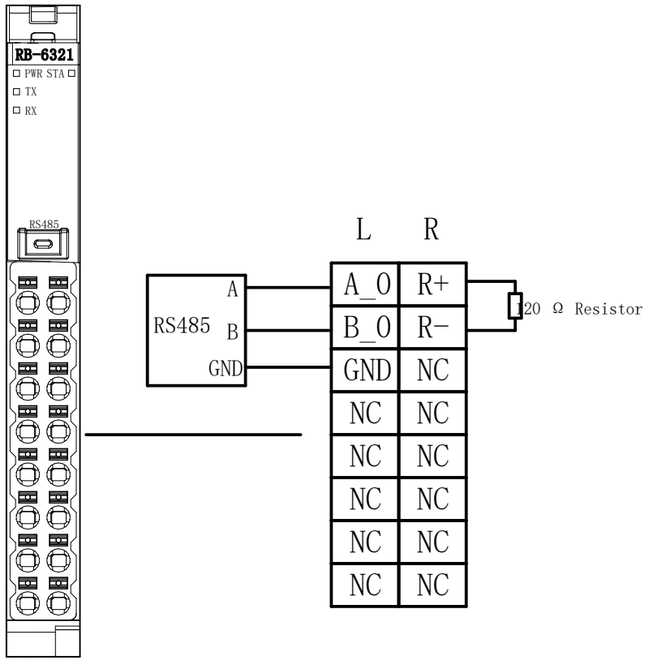


# RB-6321

Single-Channel MODBUS RTU Communication Module



| | | | | | | | | |
|---|---|---|---|---|---|---|---|---|
| | | | Date | 2024/11/14 | DECOWELL | Nanjing Decowell Automation | Communication Module | = |
| | | | Checked | Lidao | | | | + |
| | | | Approved | | RB Series | | | RB-V2.0 Pages 15 |
| Revision | Date | Name | Original Project | | Supersedes | Superseded by | | Page 15/19 |

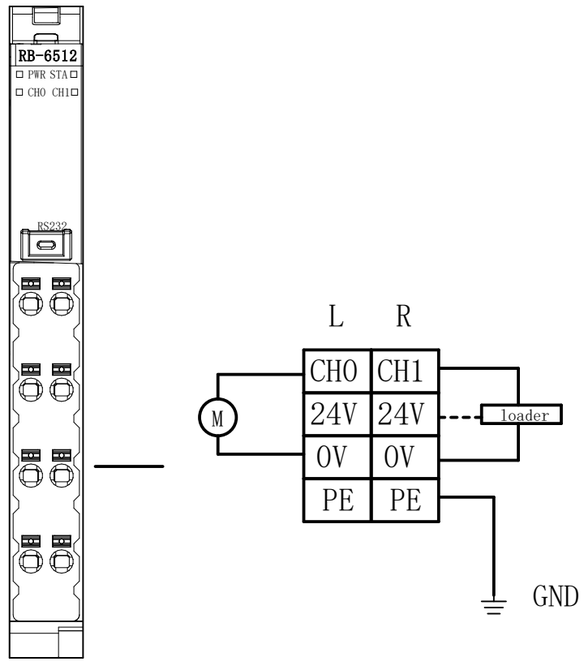


# RB-6512

PWM Output Module



| | | | | | | | | | | |
|---|---|---|---|---|---|---|---|---|---|---|
| | | | Date | 2024/11/14 | DECOWELL | Nanjing Decowell Automation | Pulse Output Module | | = | |
| | | | Checked | Lidao | | | | | + | |
| | | | Approved | | RB Series | | | | RB-V2.0 | Pages 16 |
| Revision | Date | Name | Original Project | | Supersedes | Superseded by | | | | Page 16/19 |

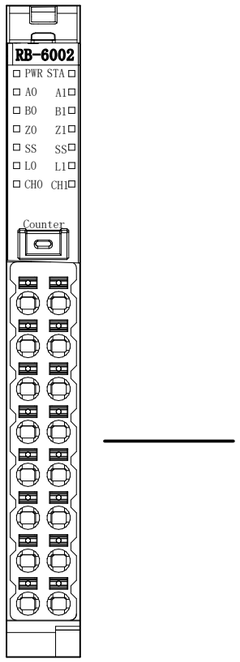


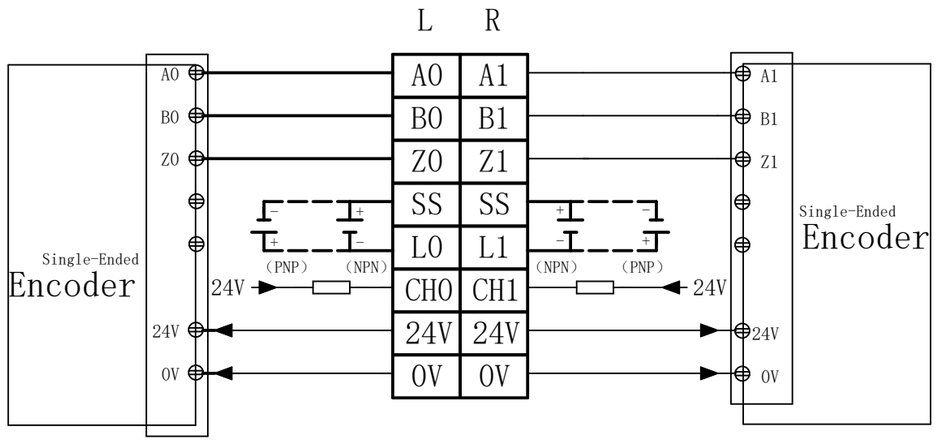


# RB-6002

2-Ch Single-Ended Encoder Module





| | | | | | | | | | |
|---|---|---|---|---|---|---|---|---|---|
| | | | Date | 2024/11/14 | DECOWELL | Nanjing Decowell Automation | 2-Ch Single-Ended Encoder Input Module | | = |
| | | | Checked | Lidao | | | | | + |
| | | | Approved | | RB Series | | | RB-V2.0 | Pages 17 |
| Revision | Date | Name | Original Project | | Supersedes | Superseded by | | | Page 17/19 |

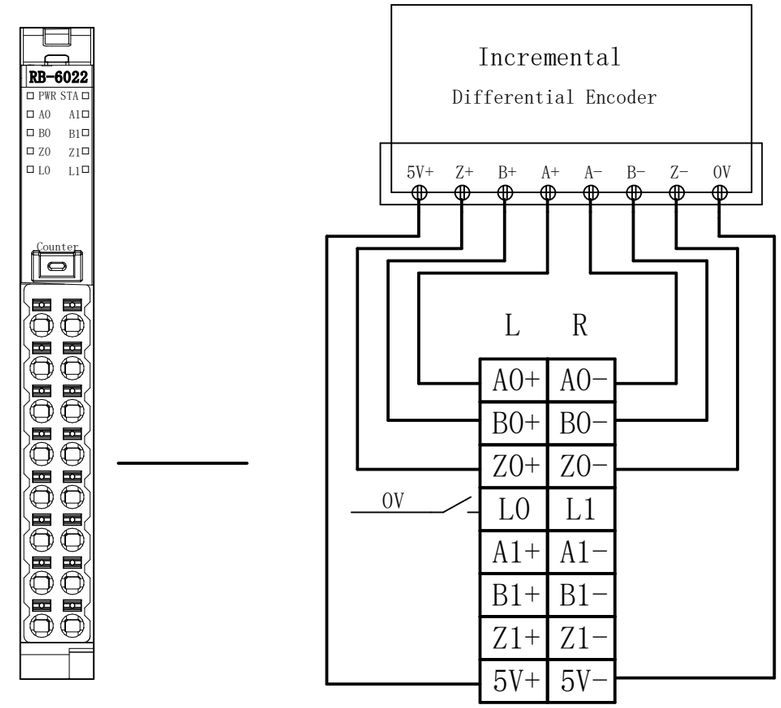


# RB-6022

2-Ch Differential Encoder Module



| | | | | | | | | | |
|---|---|---|---|---|---|---|---|---|---|
| | | | Date | 2024/11/14 | DECOWELL | Nanjing Decowell Automation | 2-Ch Differential Encoder Input Module | | = |
| | | | Checked | Lidao | | | | | + |
| | | | Approved | | RB Series | | | RB-V2.0 | Pages 18 |
| Revision | Date | Name | Original Project | | Supersedes | Superseded by | | | Page 18/19 |

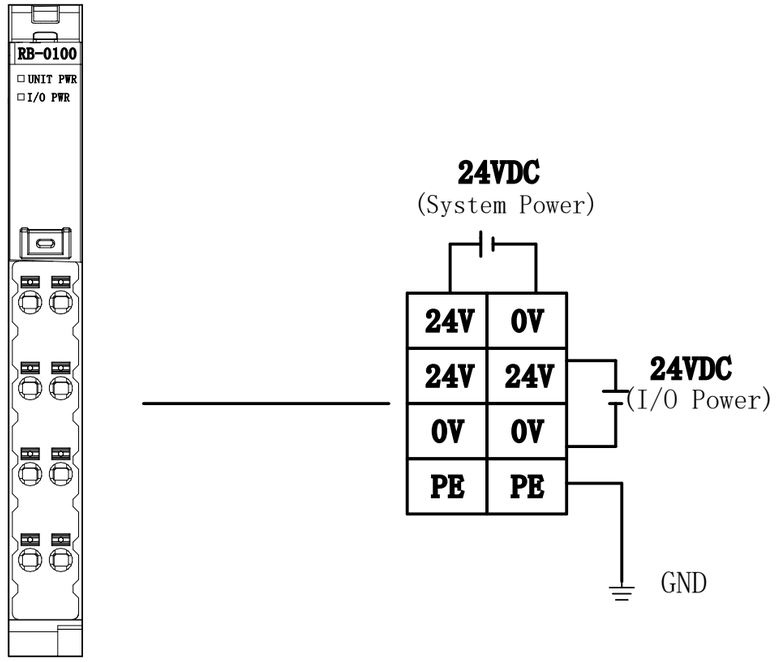


# RB-0100

System Power & I/O Power Module



| | | | | | | | | | | |
|---|---|---|---|---|---|---|---|---|---|---|
| | | | Date | 2024/11/14 | DECOWELL | Nanjing Decowell Automation | Power Module | | = | |
| | | | Checked | Lidao | | | | | + | |
| | | | Approved | | RB Series | | | | RB-V2.0 | Pages 19 |
| Revision | Date | Name | Original Project | | Supersedes | Superseded by | | | | Page 19/19 |